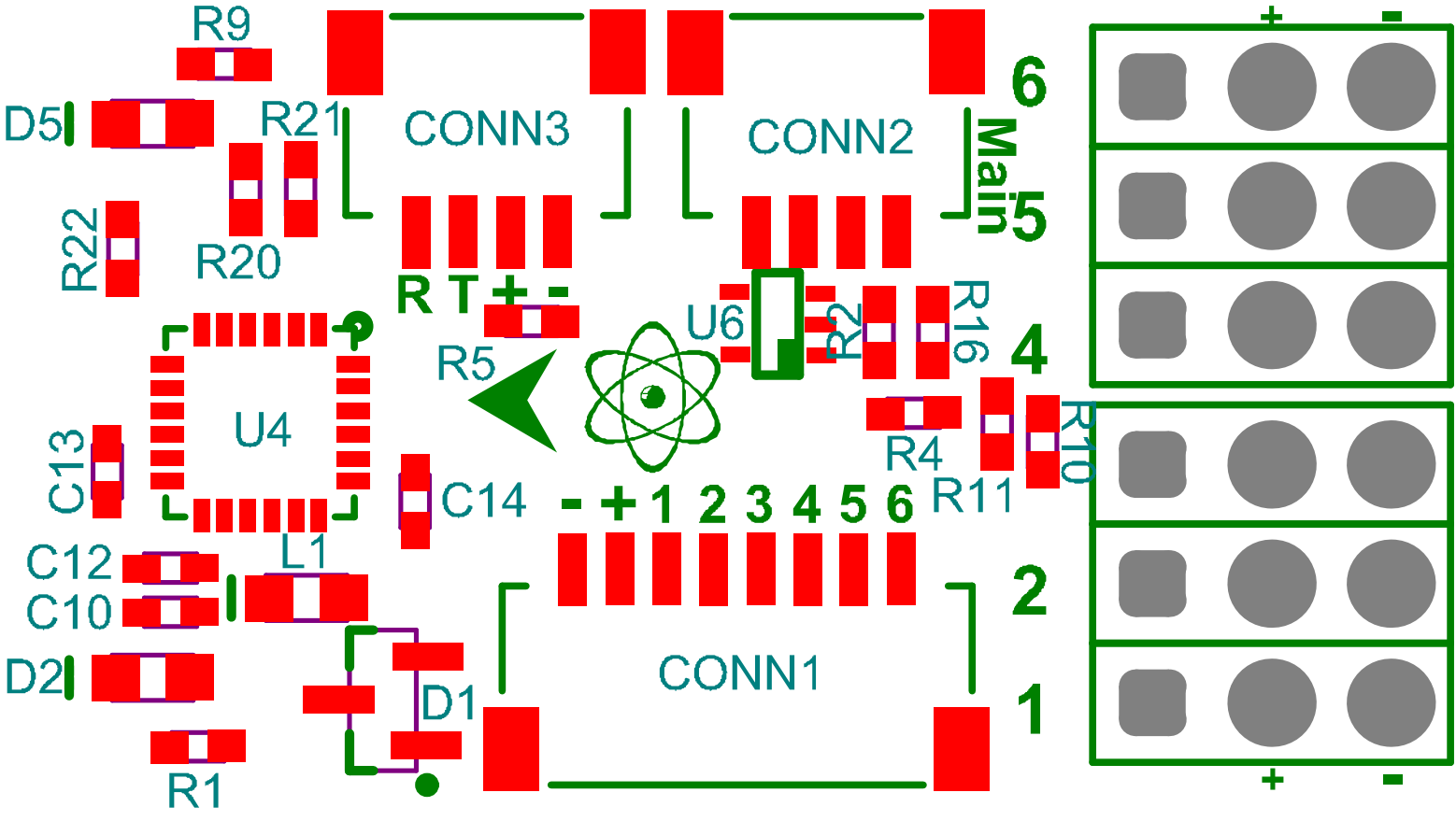
R9
D5
R21
CONN3
CONN2
6
Main
5
R22
R20
R T + -
R5
U6
R2
R16
4
U4
C13
C14
R4
R11
R10
- + 1 2 3 4 5 6
C12
L1
C10
2
D2
D1
CONN1
1
R1
+
-

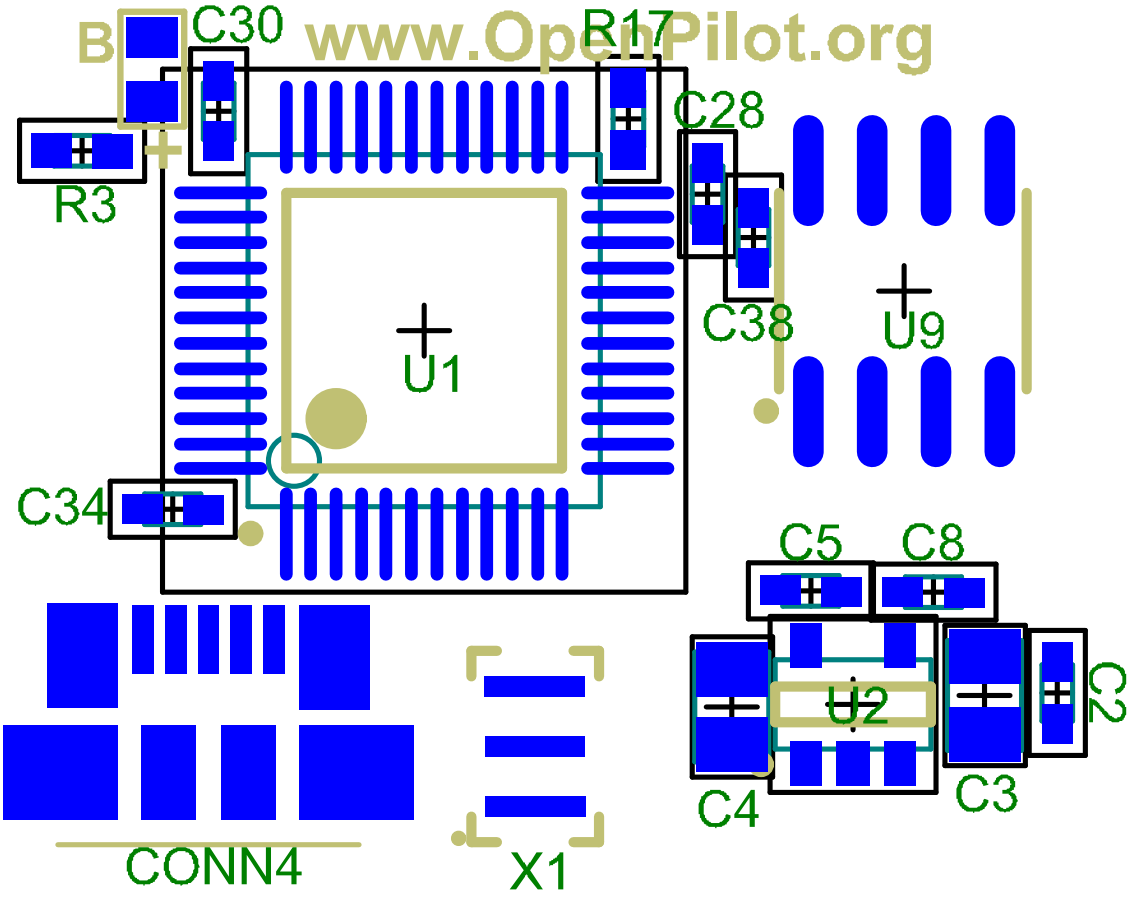
B
C30
www.OpenPilot.org
R17
C28
R3
C38
U9
U1
C34
C5
C8
U2
C2
C4
C3
CONN4
X1

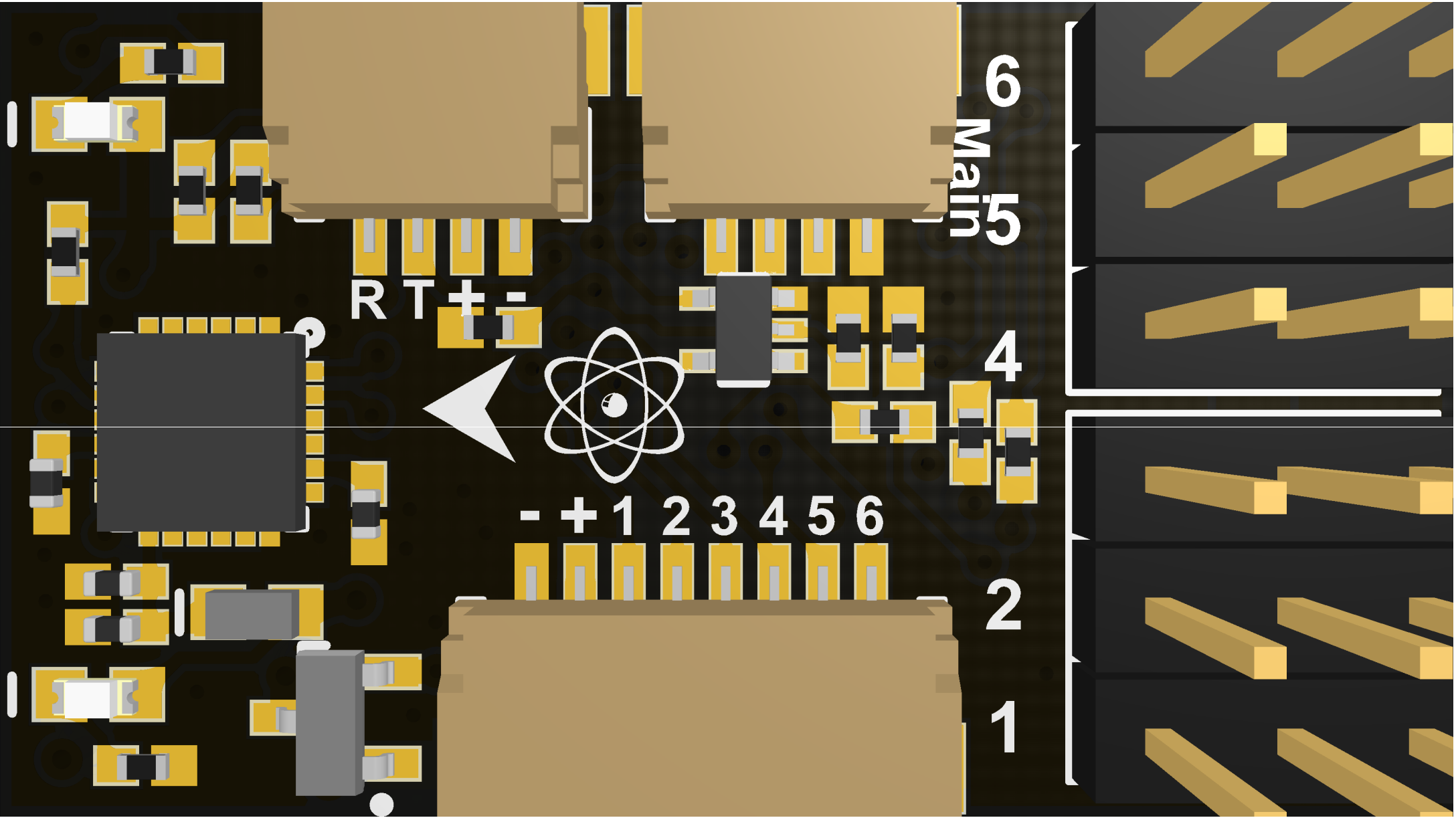
RT
+ -
- + 1 2 3 4 5 6
Main
6
5
4
2
1

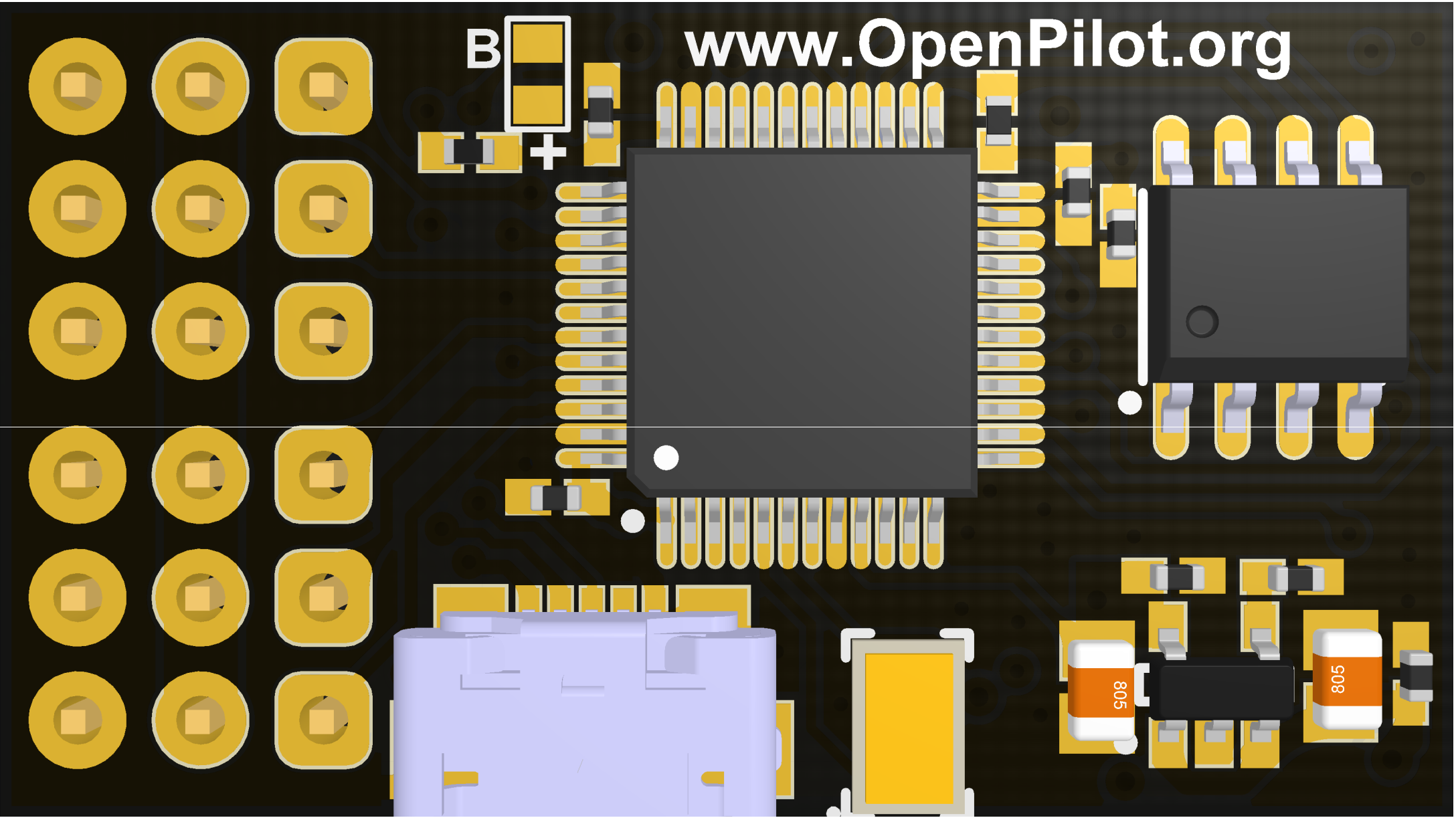
B
+
www.OpenPilot.org
805
805